CH40803 REV A

ALL INFORMATION CONTAINED IN THIS DOCUMENT SHOULD BE USED FOR REFERENCE PURPOSES ONLY & ARE SUBJECT TO CHANGE WITHOUT PRIOR NOTIFICATION. ALSO, THIS DOCUMENT IS CONSIDERED PROPRIETARY & THE SOLE PROPERTY OF CRYOMECH, INC. & SHOULD NOT BE REPRODUCED IN ANY MANNER WITHOUT PRIOR WRITTEN APPROVAL.

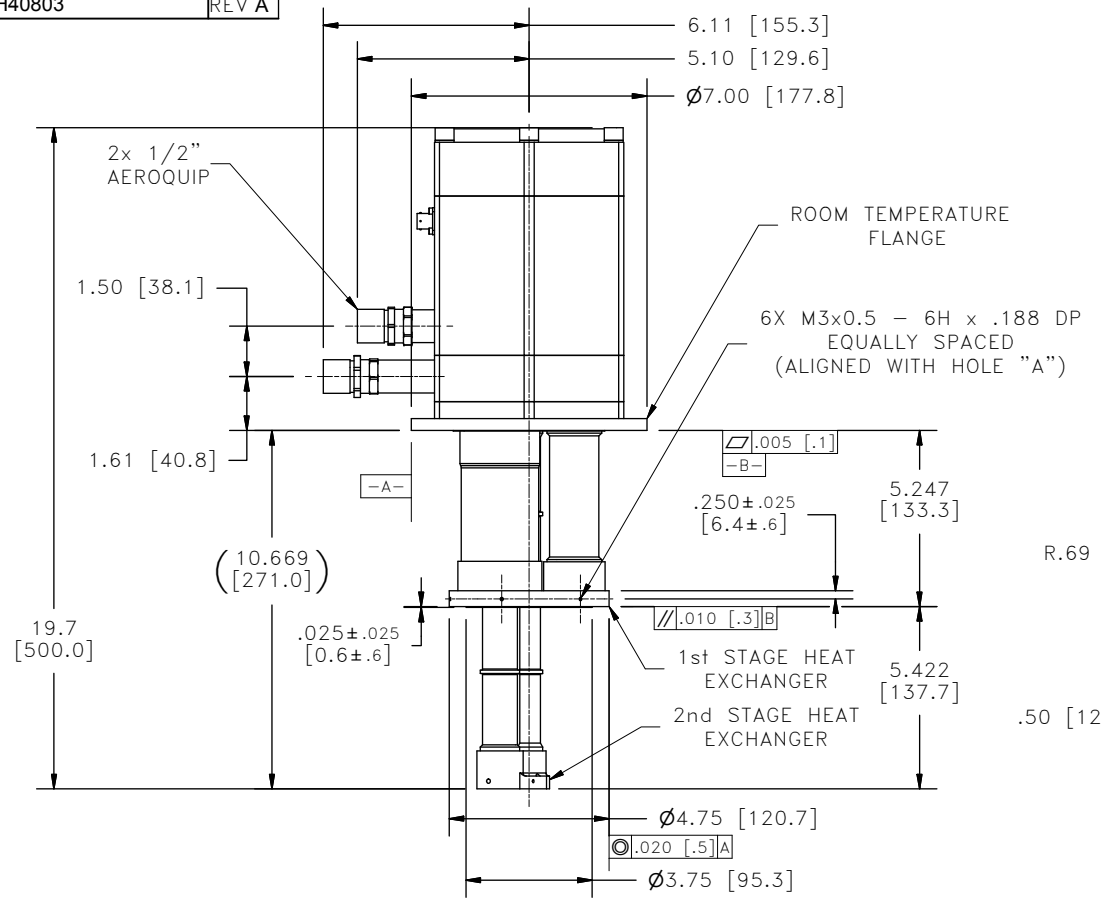

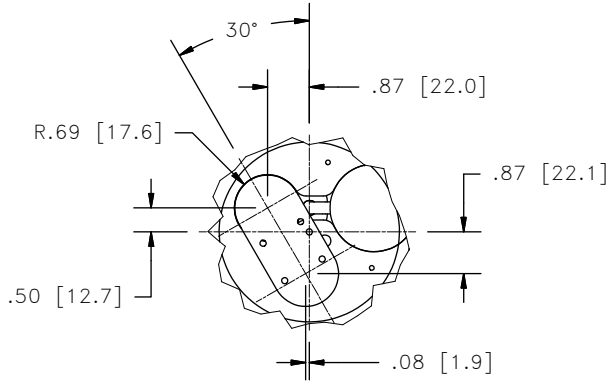

HEAT EXCHANGER DETAIL B

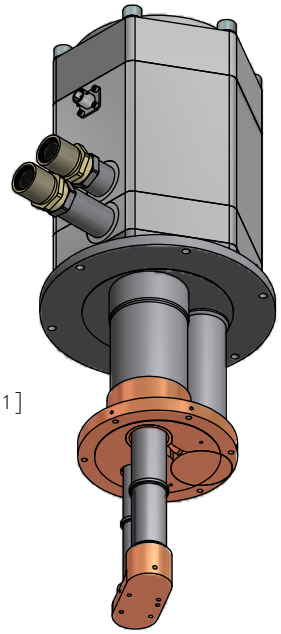

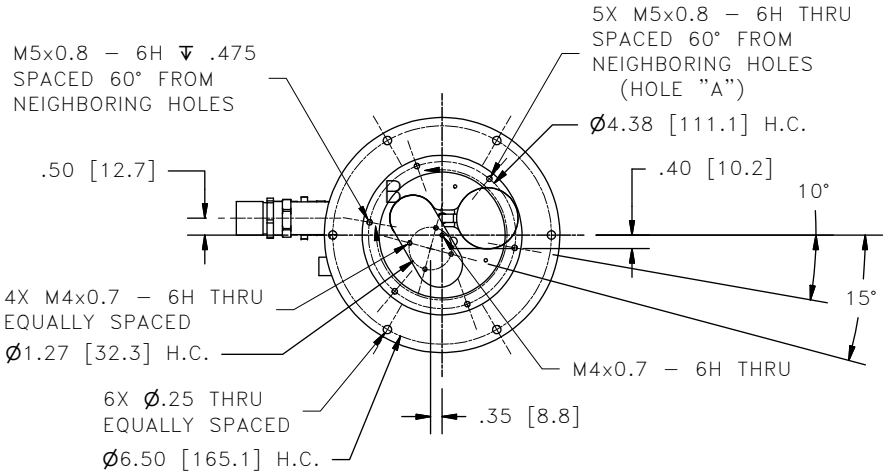

SPECIAL NOTE: COLDHEAD MUST BE OPERATED COLD END DOWN

THIRD ANGLE PROJECTION

CRYOMECH, INC
113 FALSO DRIVE SYRACUSE, N.Y. 13211
Tel: (315)455-2555 Fax:(315)455-2544

ALL DIMENSIONS ARE IN INCHES
TOLERANCES: FRACTIONS ±1/32 DECIMALS XXX=±.005 XX =±.01 X=±.1
ANGLES ±.5° ALLOVER FINISH 25 Ra
CONCENTRICITY .005 TOTAL INDICATOR RUN OUT
PERPENDICULAR ±.002 (UNLESS OTHERWISE SPECIFIED)

NAME: CH40803 COLDHEAD OUTLINE
DWG #: CH40803 SHT 1 OF 1
MATERIAL: 103-214 (A)
DWN BY: ADF DATE: 31OCT11 SCALE: .175 DWG SIZE: A
1ST CHK: PB DATE: 31OCT11 2ND CHK: BZ DATE: 31OCT11
CUST: - BTA: BTA-CH40403

ECN	ZONE	REV	DESCRIPTION	DATE
2712	–	A	MATERIAL 103-214 WAS 103-16 (PT403)	31OCT11
1926	–	–	INITIAL RELEASE	29JUL09