CH60425 REV -

ALL INFORMATION CONTAINED IN THIS DOCUMENT SHOULD BE USED FOR REFERENCE PURPOSES ONLY & ARE SUBJECT TO CHANGE WITHOUT PRIOR NOTIFICATION. ALSO, THIS DOCUMENT IS CONSIDERED PROPRIETARY & THE SOLE PROPERTY OF CRYOMECH, INC. & SHOULD NOT BE REPRODUCED IN ANY MANNER WITHOUT PRIOR WRITTEN APPROVAL.

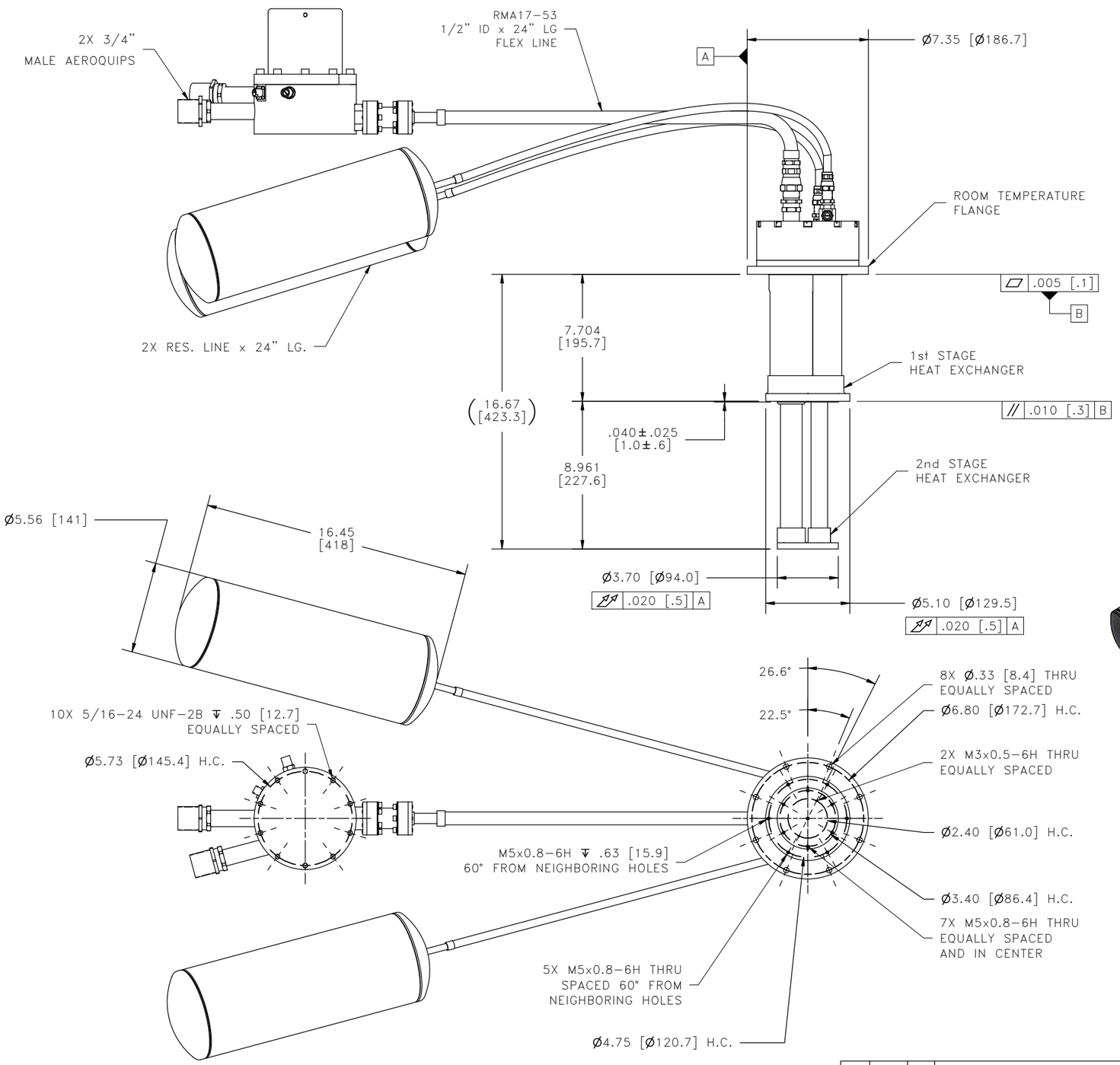

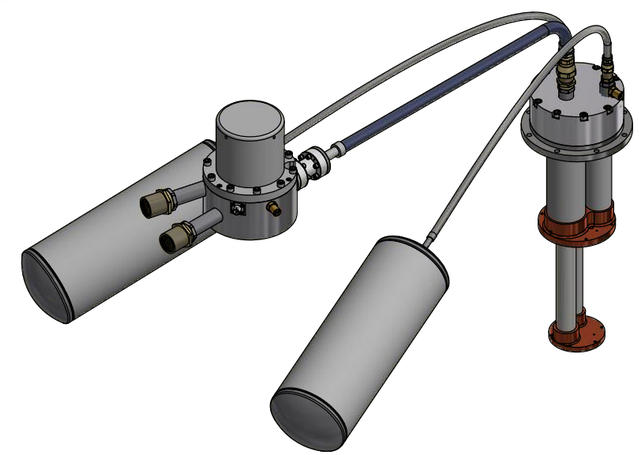

THIRD ANGLE PROJECTION

CRYOMECH, INC.
SYRACUSE, NY U.S.A. WWW.CRYOMECH.COM

UNLESS OTHERWISE SPECIFIED: ALL DIMENSIONS ARE IN INCHES
ALTERNATE UNITS IN "[ ]" ARE FOR REFERENCE ONLY
TOLERANCES: X & X 7/8 = ±1/16, X.XXX = ±.005, X.XX = ±.01
CIRCULAR RUNOUT .005 TIR, ANGULARITY .005, ALLOVER FINISH 25 Ra

NAME: CH60425 OUTLINE DRAWING			
DWG #: CH60425	SHT 1 OF 1		
MATERIAL: 103-695			
DWN BY: CJS	DATE: 16FEB21	SCALE: 1 : 7	DWG SIZE: B
1ST CHK: -	DATE: -	2ND CHK: -	DATE: -
CUST: -		BTA: BTA-CH40420	

ECN	ZONE	REV	DESCRIPTION	DATE
4683	–	–	INITIAL RELEASE	16FEB21